未注公差/General tolerances(mm)														
0 ~ 3	>3 ~ 6	>6 ~ 10	>10 ~ 18	>18 ~ 30	>30 ~ 50	>50 ~ 80	>80 ~ 120	>120 ~ 180	>180 ~ 250	>250 ~ 315	>315 ~ 400	>400 ~ 500	>500	0.1/10
±0.12	±0.18	±0.22	±0.26	±0.31	±0.37	±0.57	±0.80	±0.93	±1.05	±1.15	±1.60	±2.20	±2.50	±2°

PCB LAYOUT

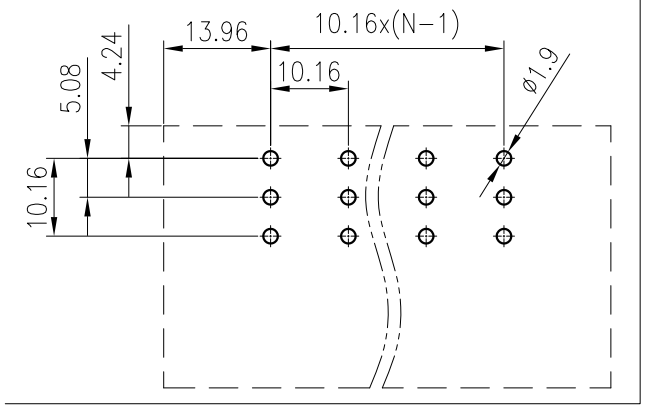

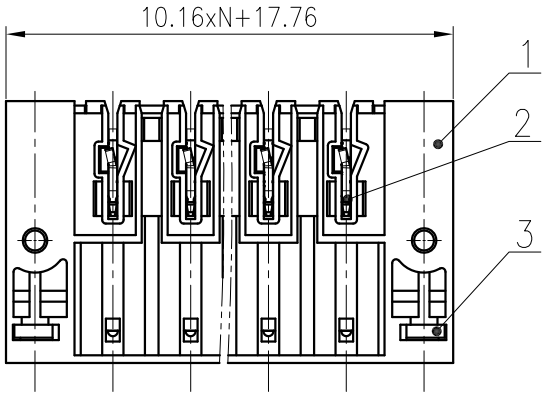

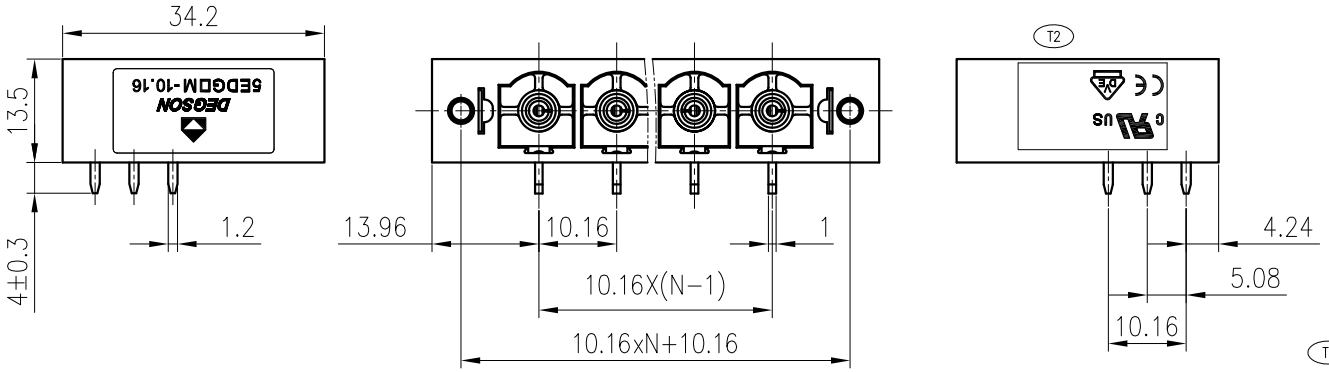

ITEM	NAME OF PART	MATERIAL	NOTES
3	Nut	Steel	M3/Zn Plated
2	Pin header	Copper	Ag Plated
1	Housing	PA66	UL94V−0

		B	C	D
	UL 标准/UL Standard:			
T1	额定电压/电流/Rated Voltage(V)/Current(A)	300/52	300/52	600/5
	IEC 标准/IEC Standard:			
	过压类别/Overvoltage Category/污染等级/Pollution Degree	III/3	III/2	II/2
	额定电压/电流/Rated Voltage(V)/Current(A)	600/57	/	/
	额定脉冲电压(KV)/Rate Impulse Voltage(KV)	6	/	/
	间距/Pitch(mm)/线数范围/Poles	10.16/N=02~08P		
	使用温度范围/Operating temperature(°C)	−40~+105		
	符合RoHS环保要求/Conform to RoHS	Yes		

REV	ECN	DESCRIPTION	DRFT	DATE
T2	20−0215	2xCancel engraving	Yin DK	2020.10.10
T1	17−0131	Design Modify	Xin	2017.03.10

MATERIAL: / SURFACE: /

MAT NO.: /

STATUS: /

APPD: Lan ChH 2020.10.14

CHKD: Gong YZh 2020.10.14

DRFT: CMZ 2016.10.02

DEGSON®

宁波高松电子有限公司
NINGBO DEGSON ELECTRICAL CO., LTD

NAME: 5EDGRM−10.16−XXP−1Y−10A(H)

DRAWING NO.: 5EDGRM−10.16−C02 REV T2

TYPE: CUSTOMER DRAWING SCALE: 1:1 SHEET 1/1

SIZE: A4 mm (inch)