未注公差/General tolerances(mm)														
0 ~ 3	>3 ~ 6	>6 ~ 10	>10 ~ 18	>18 ~ 30	>30 ~ 50	>50 ~ 80	>80 ~ 120	>120 ~ 180	>180 ~ 250	>250 ~ 315	>315 ~ 400	>400 ~ 500	>500	0.1/10
±0.12	±0.18	±0.22	±0.26	±0.31	±0.37	±0.57	±0.80	±0.93	±1.05	±1.15	±1.60	±2.20	±2.50	±2°

Transfer or duplication of this document as well as the utilization or communication of its contents are prohibited unless explicit authorization is granted. Violations will be liable for compensation. All rights reserved for patent, utility model or designs registrations. 除非始于获得授权，否则禁止转让、复制、利用、交流本文件的内容。侵犯者将负赔偿责任。本公司保留对涉及发明、实用新型或外观专利的所有权利。

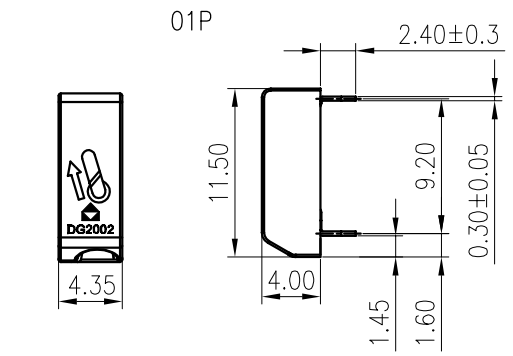

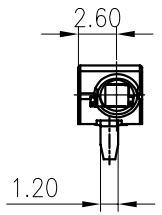

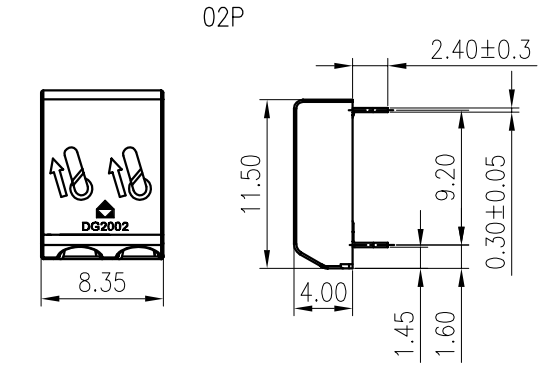

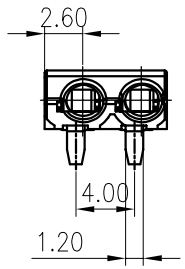

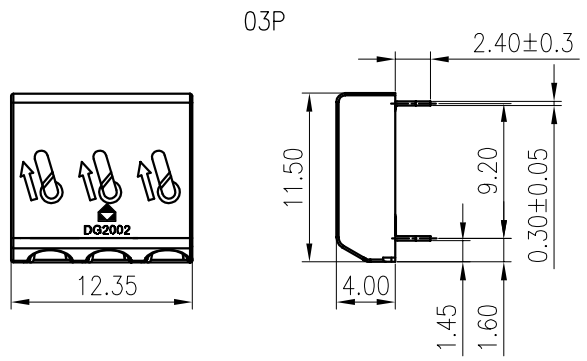

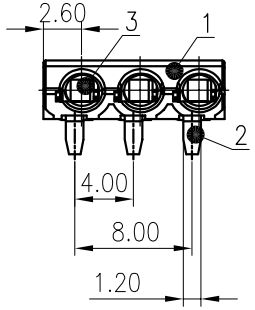

ITEM	NAME OF PART	MATERIAL	NOTES
3	Spring	Stainless steel	/
2	Pin header	Copper alloy	Sn plated
1	Housing	LCP	UL94V-0

UL 标准/UL Standard:			
额定电压/电流/Rated Voltage(V)/Current(A)	600V/9A(01P) 300V/9A(02P/03P)		
EC 标准/IEC Standard:			
过压类别/Overvoltage Category/污染等级/Pollution Degree	Ⅲ/3	Ⅲ/2	Ⅱ/2
额定电压/电流/Rated Voltage(V)/Current(A)	32/9	160/9	160/9
额定脉冲电压(KV)/Rate Impulse Voltage(KV)	4	4	4
线径范围(硬线和软线)/Wire Range(rigid and flexible)(mm^2/AWG)	0.2~0.75/24~18		
间距/Pitch(mm)/线数范围/Poles	4.0/N=01~03P		
剥线长度/Stripping length(mm)	8~9		
使用温度范围/Operating temperature(°C)	-40~+130		
符合RoHS环保要求/Conform to RoHS	Yes		

PCB LAYOUT

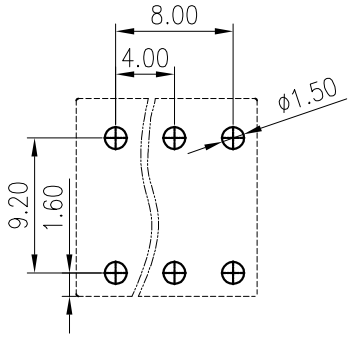

REV	ECN	DESCRIPTION	DRFT	DATE

MATERIAL: / SURFACE: /

MAT NO.: /

STATUS: /

APPD:

CHKD:

DRFT: MJN 2017.05.10

DEGSON®

宁波高松电子有限公司
NINGBO DEGSON ELECTRICAL CO., LTD

NAME: DG2002-4.0-XXP-1Y-300A(H)

DRAWING NO.: DG2002-4.0-C08 REV T0

SIZE: A4 mm (inch) TYPE: CUSTOMER DRAWING SCALE: 2:1 SHEET 1/1