FOR-1754 Rev.1.1

未注公差/General tolerances(mm)														
0 ~ 3	>3 ~ 6	>6 ~ 10	>10 ~ 18	>18 ~ 30	>30 ~ 50	>50 ~ 80	>80 ~ 120	>120 ~ 180	>180 ~ 250	>250 ~ 315	>315 ~ 400	>400 ~ 500	>500	0.1/10
±0.12	±0.18	±0.22	±0.26	±0.31	±0.37	±0.57	±0.80	±0.93	±1.05	±1.15	±1.60	±2.20	±2.50	±2°

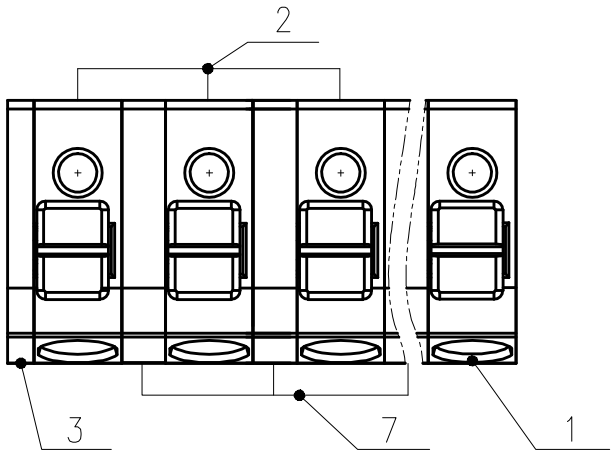

PCB LAYOUT

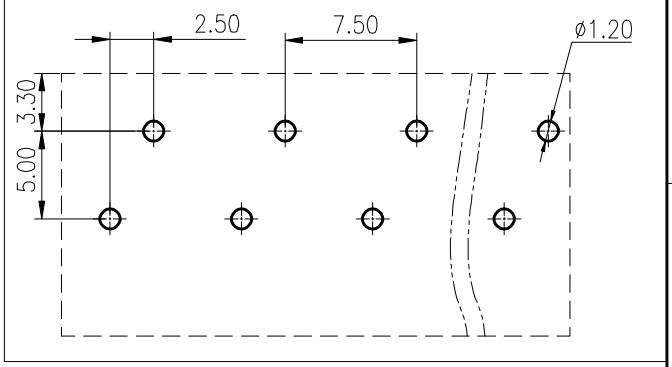

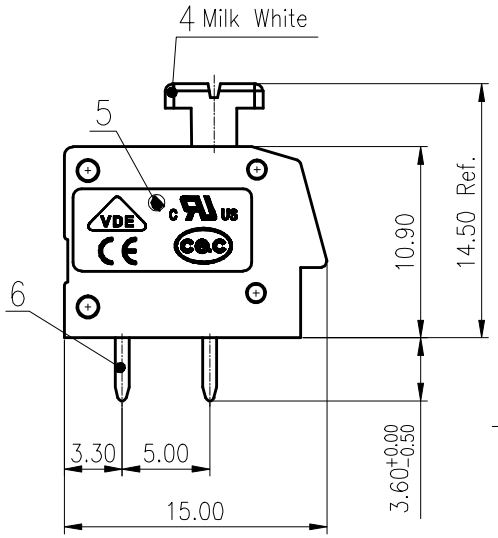

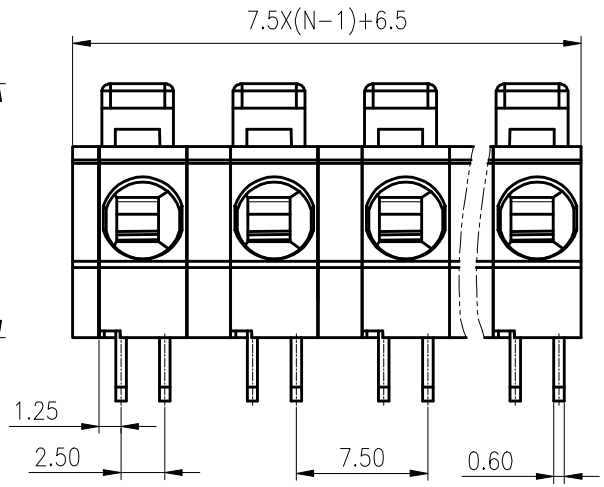

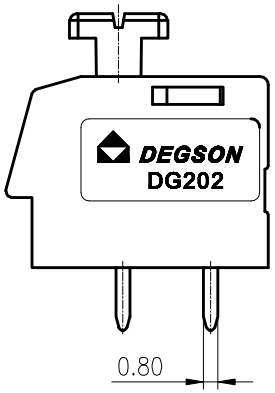

ITEM	NAME OF PART	MATERIAL	NOTES
7	Clapboard	PA66	UL94V-0
6	Pin header	Copper	Sn plated
5	Spring	Stainless steel	
4	Button	PA66	UL94V-0
3	Cover	PA66	UL94V-0
2	Center Housing	PA66	UL94V-0
1	Left Housing	PA66	UL94V-0

	B	C	D
UL 标准/UL Standard:			
额定电压/电流/Rated Voltage(V)/Current(A)	300/12	/	300/10
IEC 标准/IEC Standard:			
过压类别/Overvoltage Category/污染等级/Pollution Degree	Ⅲ/3	Ⅲ/2	Ⅱ/2
额定电压/电流/Rated Voltage(V)/Current(A)	/	450/16	/
工频耐压/Withstanding Voltage (V/min)	/	AC2500	/
线径范围(硬线和软线)/Wire Range(rigid and flexible)(mm^2/AWG)	0.2~2.5/20~12		
间距/Pitch(mm)/线数范围/Poles	7.5/N=02~16P		
剥线长度/Stripping length(mm)	10-11		
使用温度范围/Operating temperature(°C)	-40~+105		
符合RoHS环保要求/Conform to RoHS	Yes		

MATERIAL: /	SURFACE: /		
MAT NO.: /	DEGSON® 宁波高松电子有限公司 NINGBO DEGSON ELECTRICAL CO., LTD		
STATUS: /			
APPD: LiGL 2020.05.27	NAME: DG202-7.5-XXP-1Y-00A(H)		
CHKD: Mek 2020.05.27			
DRFT: LuoXM 2020.05.27	DRAWING NO.: DG202-7.5-C01	REV	T6
SIZE: A4 mm (inch)	TYPE: CUSTOMER DRAWING	SCALE: 2.5:1	SHEET 1/1

REV	ECN	DESCRIPTION	DRFT	DATE