FOR-1754 Rev.1.1

未注公差/General tolerances(mm)														
0 ~ 3	>3 ~ 6	>6 ~ 10	>10 ~ 18	>18 ~ 30	>30 ~ 50	>50 ~ 80	>80 ~ 120	>120 ~ 180	>180 ~ 250	>250 ~ 315	>315 ~ 400	>400 ~ 500	>500	0.1/10
±0.12	±0.18	±0.22	±0.26	±0.31	±0.37	±0.57	±0.80	±0.93	±1.05	±1.15	±1.60	±2.20	±2.50	±2°

DGH95J-01P-1Y-00A(H)

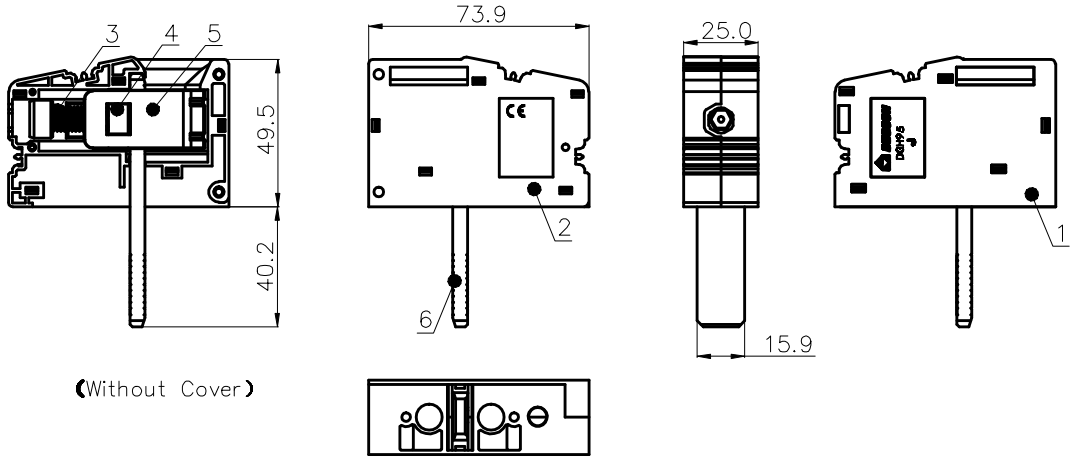

(Without Cover)

DGH95K-01P-1Y-00A(H)

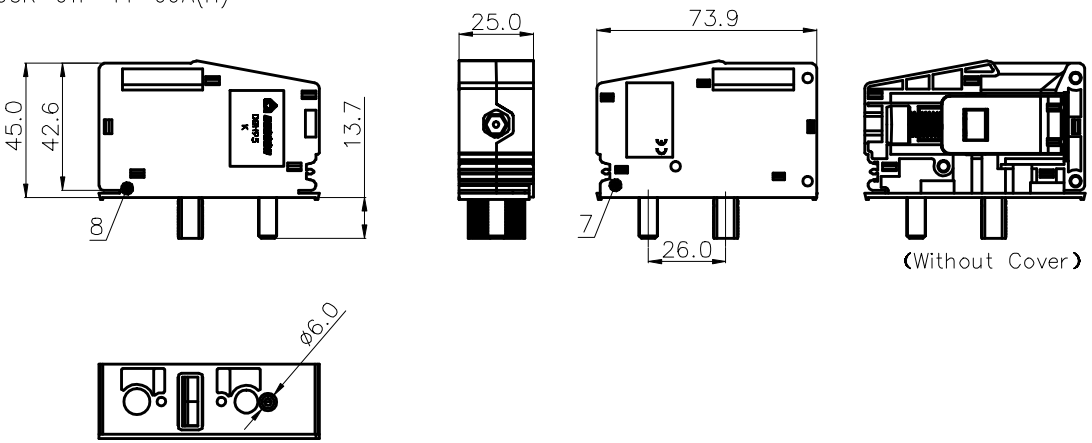

(Without Cover)

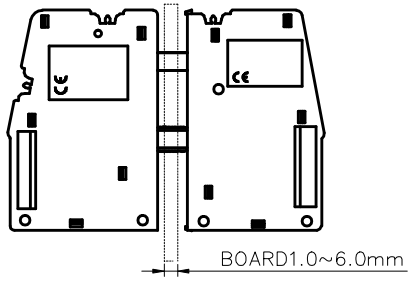

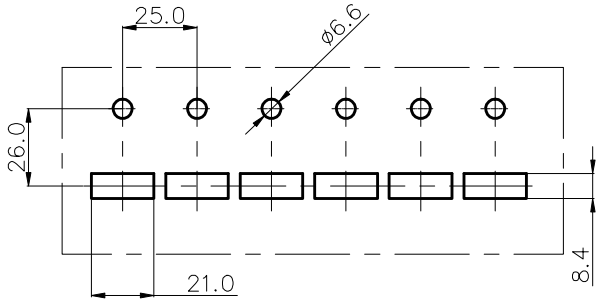

LAYOUT

UL 标准/UL Standard:	B	C	D
额定电压/电流/Rated Voltage(V)/Current(A)	600/230	600/230	600/5
IEC 标准/IEC Standard:			
过压类别/Overvoltage Category/污染等级/Pollution Degree	Ⅲ/3	Ⅲ/2	Ⅱ/2
额定电压/电流/Rated Voltage(V)/Current(A)	1000/232	/	/
额定脉冲电压(KV)/Rate Impulse Voltage(KV)	8	/	/
螺丝扭矩/Torque Tightening(N·m/Lb.in)	M8, 15.0/132.8		
线径范围(硬线和软线)/Wire Range(rigid and flexible)(mm^2/AWG)	25~95/4~4/0		
间距/Pitch(mm)/线数范围/Poles	25.0/N=01P		
剥线长度/Stripping length(mm)	27		
使用温度范围/Operating temperature(°C)	-40~+105		
符合RoHS环保要求/Conform to RoHS	Yes		

ITEM	NAME OF PART	MATERIAL	NOTES
8	Housing-K-1	PA66	UL94V-0
7	Housing-K-2	PA66	UL94V-0
6	Current carrier	Copper	Sn Plated
5	Cage	Spcc	Sn Plated
4	Cage	Copper alloy	Ni Plated
3	Screw	Steel	Zn Plated
2	Housing-J-1	PA66	UL94V-0
1	Housing-J-2	PA66	UL94V-0

REV	ECN	DESCRIPTION	DRFT	DATE

MATERIAL: / SURFACE: /

MAT NO.: /

STATUS: /

APPD:

CHKD:

DRFT: Nick 2015.08.18

SIZE: A4 mm (inch)

DEGSON®

宁波高松电子有限公司
NINGBO DEGSON ELECTRICAL CO., LTD

NAME: DGH95-01P-1Y-00AH

DRAWING NO.: DGH95-C01 REV T0

TYPE: CUSTOMER DRAWING SCALE: 2:1 SHEET 1/1