未注公差/General tolerances(mm)															
0 ~ 3	>3 ~ 6	>6 ~ 10	>10 ~ 18	>18 ~ 30	>30 ~ 50	>50 ~ 80	>80 ~ 120	>120 ~ 180	>180 ~ 250	>250 ~ 315	>315 ~ 400	>400 ~ 500	>500	0.1/10	
±0.12	±0.18	±0.22	±0.26	±0.31	±0.37	±0.57	±0.80	±0.93	±1.05	±1.15	±1.60	±2.20	±2.50	±2°	

UL 标准/UL Standard:	B	C	D
额定电压/电流/Rated Voltage(V)/Current(A)	300/42	300/42	600/5
EC 标准/IEC Standard:			
过压类别/Overvoltage Category/污染等级/Pollution Degree	III/3	III/2	II/2
额定电压/电流/Rated Voltage(V)/Current(A)	500/41	630/41	1000/41
额定脉冲电压(KV)/Rate Impulse Voltage(KV)	6	6	6
间距/Pitch(mm)/线数范围/Poles	7.62/N=02~12P		
使用温度范围/Operating temperature(℃)	-30~+120		
符合RoHS环保要求/Conform to RoHS	Yes		

PCB LAYOUT

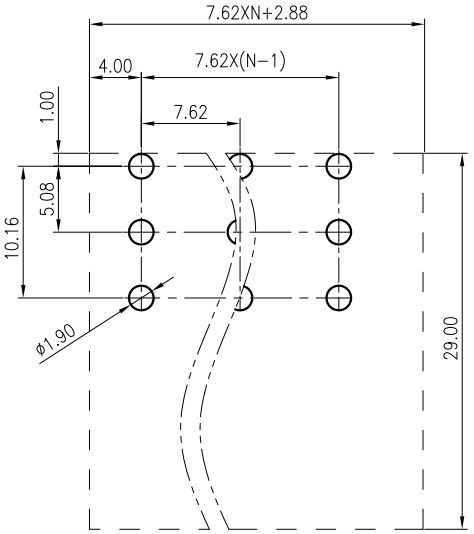

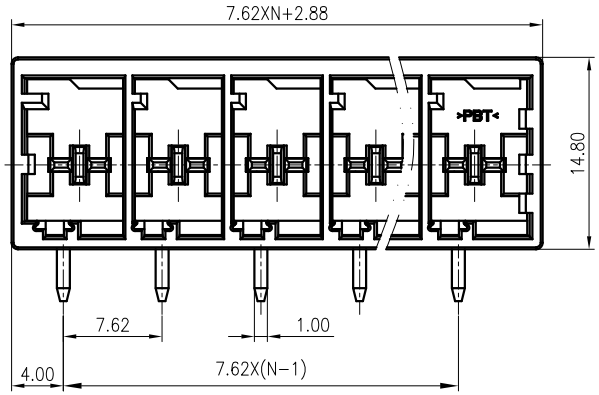

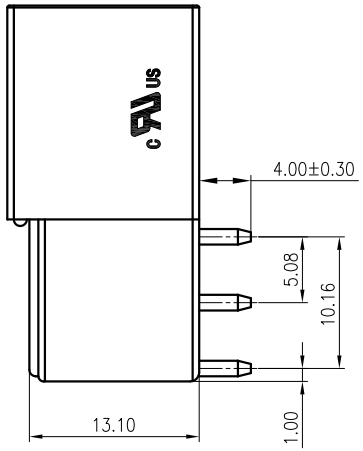

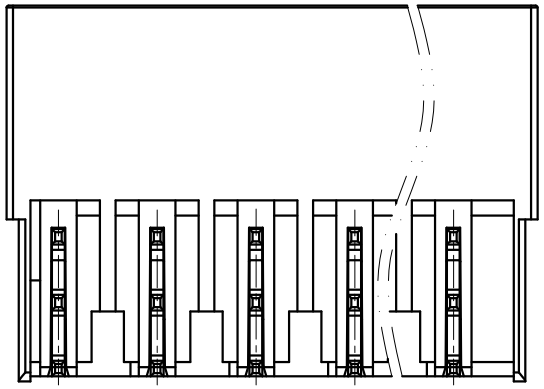

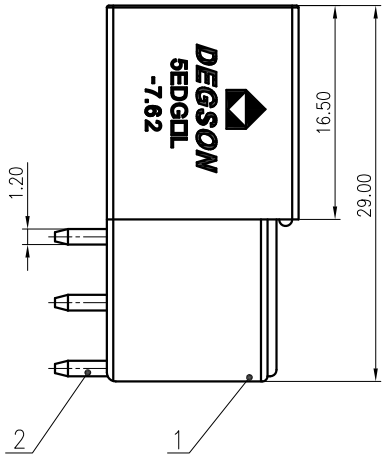

ITEM	NAME OF PART	MATERIAL	NOTES
2	Pin	Copper	Sn Plated
1	Housing	PBT	UL94V-0

MATERIAL: / SURFACE: /

MAT NO.:

STATUS: /

APPD: Lan ChH 2021.03.30

CHKD: Gong YZh 2021.03.30

DRFT: CenSL 2020.04.18

DEGSON® 宁波高松电子有限公司 NINGBO DEGSON ELECTRICAL CO., LTD

NAME: 5EDGRL-7.62-XXP-1Y-00A(H)

DRAWING NO.: 10001345 REV T0

SIZE: A3 mm (inch) TYPE: CUSTOMER DRAWING SCALE: 2.5:1 SHEET 1/1

REV	ECN	DESCRIPTION	DRFT	DATE

Transfer or duplication of this document as well as the utilization or communication of its contents are prohibited unless explicit authorization is granted. Violations will be liable for compensation. All rights reserved for patent, utility model or designs registrations. 除非给予明确授权，否则禁止转让、复制、利用、交流本文件的内容，侵犯者将负赔偿责任。本公司保留对涉及发明、实用新型和外观专利的所有权利。