FOR-1754 Rev.1.1

PITCH RANGE IN MM			NOMINAL DIMENSION RANGE IN MM					
TO 6	OVER 6 TO 10	OVER 10 TO 24	TO 30	OVER 30 TO 60	OVER 60 TO 100	OVER 100 TO 150	OVER 150	
±0.10	±0.15	±0.25	±0.20	±0.30	±0.50	±0.70	±1.00	0.05/10

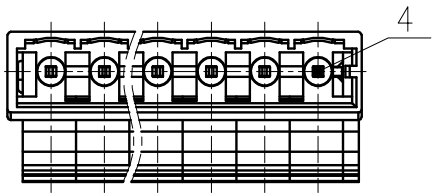

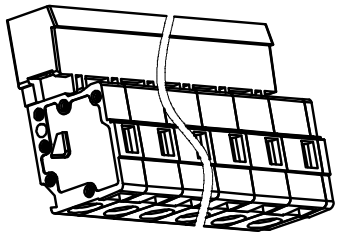

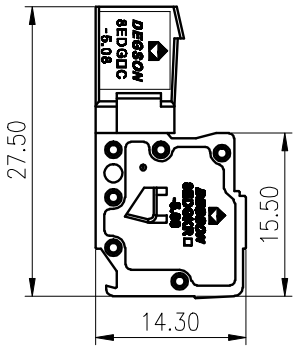

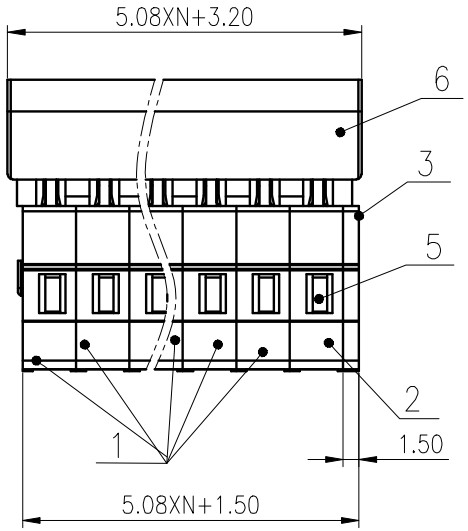

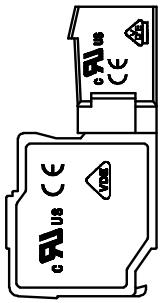

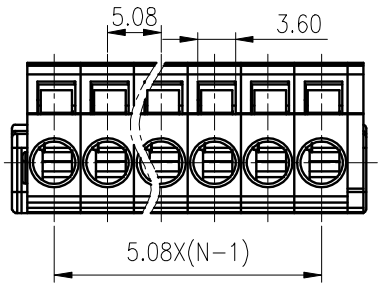

ITEM	NAME OF PART	MATERIAL	NOTES
6	Housing2	PA66	UL94V-0
5	Spring	Stainless Steel	
4	Pin	Copper	Sn Plated
3	Cover	PA66	UL94V-0
2	Side Housing	PA66	UL94V-0
1	Housing1	PA66	UL94V-0

	B	C	D
UL 标准/UL Standard:			
额定电压/电流/Rated Voltage(V)/Current(A)	300/15	/	300/10
IEC 标准/IEC Standard:			
过压类别/Overvoltage Category/污染等级/Pollution Degree	Ⅲ/3	Ⅲ/2	Ⅱ/2
额定电压/电流/Rated Voltage(V)/Current(A)	/	320/20	/
额定脉冲电压(KV)/Rate Impulse Voltage(KV)	/	4	/
线径范围(硬线和软线)/Wire Range(rigid and flexible)(mm^2/AWG)	0.2~2.5/22~14		
间距/Pitch(mm)/线数范围/Poles	5.08/N=02~24P		
剥线长度/Stripping length(mm)	10		
使用温度范围/Operating temperature(°C)	-40~+105		
符合RoHS环保要求/Conform to RoHS	Yes		
标准颜色编号/Standard color number: PANTONE	PANTONE 7534U		

REV	ECN	DESCRIPTION	DRFT	DATE

MATERIAL: / SURFACE: /

MAT NO.: /

STATUS: /

APPD:

CHKD:

DRFT: CGM 2018.01.12

SIZE: A4 mm (inch)

DEGSON®

宁波高松电子有限公司
NINGBO DEGSON ELECTRICAL CO., LTD

NAME: 8EDGKR-5.08-XXP-11-01A(H)

DRAWING NO.: 8EDGKR-5.08-C02 REV T0

TYPE: CUSTOMER DRAWING SCALE: 3:2 SHEET 1/1